CBSE – X – 2014 EXAMINATION

SCIENCE

SET-3

Paper & Solution

Time: 3 Hrs. Max. Marks: 90

General Instructions:

1. The question paper comprises **two** Sections, **A and B**. You are to attempt both the sections.
2. All questions are **compulsory**.
3. All questions of **Section A** and all questions of **Section B** are to be attempted separately.
4. Question numbers **1** to **3** in Section A are one-mark questions. These are to be answered in one word or in one sentence.
5. Question numbers **4** to **7** in Section A are two-mark questions. These are to be answered in about 30 words each.
6. Question numbers **8** to **19** in Section A are three-mark questions. These are to be answered in about 50 words each.
7. Question numbers **20** to **24** in Section A are five-mark questions. These are to be answered in about 70 words each.
8. Question numbers **25** to **42** in Section B are multiple choice questions based on practical skills. Each question is a one-mark question. You are to select one most appropriate response out of the four provided to you.

SECTION A

Question 1. The atomic numbers of three elements A, B and C are 12, 18 and 20 respectively. State, giving reason, which two elements will show similar properties.

Solution: The elements are,

A-(Atomic number 12) = **Magnesium**

B-(Atomic number 18) = **Argon**

C-(Atomic number 20) = **Calcium**

Element Calcium and magnesium will show similar properties as they belong to same group (Group II) of the periodic table. They have same number of valence electrons and they both are metals. While argon is a noble gas.

Marks: 1

Question 2. No two individuals are absolutely alike in a population. Why?

Solution: No two individuals are absolutely alike in a population due to variations taking place during the process of DNA copying.

Marks: 1

Question 3. Write one negative effect of affluent lifestyle of few persons on the environment.

Solution: Affluent lifestyle of few persons leads to exploitation and overconsumption of natural resources which ultimately results in their scarcity.

Marks: 1

Question 4. Draw labelled diagrams to illustrate budding in *Hydra*.

Solution: Budding in Hydra:

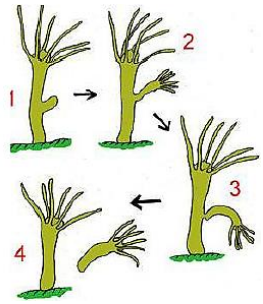

Marks: 2

Question 5. "A concave mirror of focal length 15 cm can form a magnified, erect as well as inverted image of an object placed in front of it." Justify this statement stating the position of the object with respect to the pole of the mirror in both the cases for obtaining the images.
Solution: For magnified and erect image the object is placed between pole P and focus F.
For magnified and inverted image the object is placed either at focus or anywhere between F and C.
Marks: 2

Question 6. State with reason any two possible consequences of elimination of decomposers from the Earth.
Solution: Consequences of elimination of decomposers:
i. If all the decomposers of earth are eliminated then the dead bodies of plants and animals would not be decomposed into simpler non-polluting substances so whole of the earth in no time would have heaps of dead bodies of plants and animals. They would start giving foul smell and life would become impossible on earth.
ii. Elimination of decomposers would cause imbalance of nutrients as they break complex organic material into simpler substances in different nutrient cycles.
Marks: 2

Question 7. What is water harvesting? How can this technique help in the conservation of water?
Solution: Water harvesting refers to all the processes and steps that are taken for scientific conservation of fresh water.
Water harvesting helps in the conservation of water as:
(i). It increases the ground water resources.
(ii). It reduces storm water discharge, urban floods and overloading of sewage treatment plants.
Marks: 2

Question 8. Study the following table in which positions of six elements A, B, C, D, E and F are shown as they are in the modern periodic table:

Group → / Period ↓	1	2	3-12	13	14	15	16	17	18
2	A					B			C
3				D	E				F

On the basis of the above table, answer the following questions:
(i) Name the element which forms only covalent compounds.
(ii) Name the element which is a metal with valency three.
(iii) Name the element which is a non-metal with valency three.
(iv) Out of D and E, which is bigger in size and why?
(v) Write the common name for the family to which the elements C and F belong.
Solution:

Group → / Period ↓	1	2	3-12	13	14	15	16	17	18
2	A (Li)					B (N)			C (Ne)
3				D (Al)	E (Si)				F (Ar)

(i) Element E - Silicon forms only covalent compounds.
(ii) Aluminium is a metal with the valency 3.
(iii) Nitrogen is a non-metal with the valency 3.
(iv) Out of D (Aluminium) and E (Silicon), aluminium has a larger size than silicon. This is because atomic size decreases across the period.
(v) Common name for the family to which the elements C (Neon) and F (Argon) belong is 'Noble gas' or 'Inert gas'.
Marks: 3

Question 9. The elements Be, Mg and Ca each having two electrons in their outermost shells are in periods 2, 3, and 4 respectively of the modern periodic table. Answer the following questions, giving justification in each case:
(i) Write the group to which these elements belong.
(ii) Name the least reactive element.
(iii) Name the element having largest atomic radius.
Solution: (i) Elements Be, Mg and Ca belong to Group II.
(ii) Beryllium (Be) is the least reactive element. This is because, as we move down the group, number of shells increases and the effective nuclear charge decreases. Thus, the tendency to lose electrons increases.
(iii) Calcium has the largest atomic radius. Since, number of shells increases down the group atomic radius also increases.
Marks: 3

Question 10. A carboxylic acid (molecular formula $C_2H_40_2$) reacts with an alcohol in the presence of an acid catalyst to form a compound 'X'. The alcohol on oxidation with alkaline $KMnO_4$ followed by acidification gives the same carboxylic acid $C_2H_40_2$.
Write the name and structure of
(i) carboxylic acid, (ii) alcohol and (iii) the compound 'X'.
Solution: Ethanoic acid reacts with ethanol in the presence of concentrated sulphuric acid as a catalyst to produce the ester, ethyl ethanoate. The reaction is slow and reversible.

$$\underset{\text{Ethanoic acid}}{CH_3-COOH} + \underset{\text{Ethyl alcohol}}{CH_3-CH_2-OH} \underset{KMnO_4}{\overset{H_2SO_4}{\rightleftharpoons}} \underset{\text{Ethyl ethanoate}}{CH_3\overset{O}{\overset{\|}{C}}-O-CH_2CH_3} + \underset{\text{Water}}{H_2O}$$

(i) CH_3-COOH:- Ethanoic acid
(ii) CH_3 - CH_2 - OH:- Ethyl alcohol or Ethanol
(iii) Compound $X = CH_3\overset{O}{\overset{\|}{C}}-O-CH_2CH_3$:- Ethyl ethanoate.
Marks: 3

Question 11. Define the term ‘structural’ isomerism'. Explain why propane cannot exhibit this property. Draw the structures of possible isomers of butane, C_4H_{10}.
Solution: Structural isomerism: Molecules having same molecular formula but different structure are said to be structural isomers.
Propane has the chemical formula C_3H_8 and it is represented as CH_3-CH_2-CH_3. In alkanes, isomerism arises when a particular compound can be represented in the form of both straight chain and branched chain. Also, the branching cannot be done from the first or the last carbon atom of the structure.

The structural formulae of propane show that they do not have sufficient number of carbon atoms to exist in the form of branched isomer. Hence, they do not exhibit structural isomerism.
Isomers of Butane: There are two isomers. N-butane and iso-butane

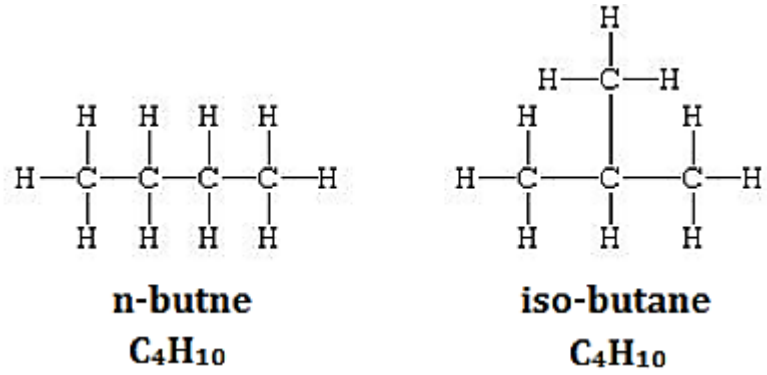

Marks: 3

Question 12. A student wants to project the image of a candle flame on a screen 90 cm in front of a mirror by keeping the flame at a distance of 15 cm from its pole.
(a) Suggest the type of mirror he should use.
(b) Determine the linear magnification in this case.
(c) Find the distance between the object and its image.
(d) Draw ray diagram to show the image formation in this case.
Solution: (a) Concave mirror
(b) Linear magnification of a concave mirror is given by:

$$m = \frac{-v}{u}$$

$$= \frac{-(-90)}{(-15)}$$

$= -6$

(c) The distance between the object and image = 90 – 15 = 75 cm.
(d) Ray diagram:

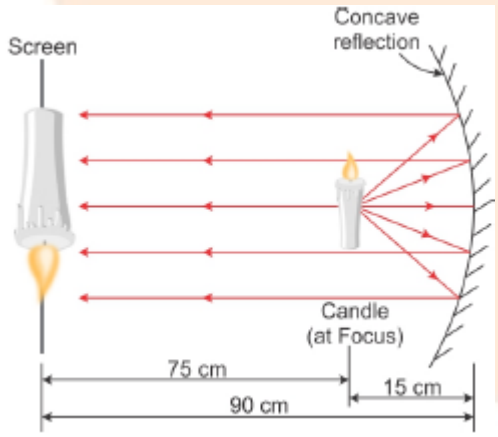

Marks: 3

Question 13. Draw a ray diagram to show the path of the refracted ray in each of the following cases:
A ray of light incident on a concave lens is
(i) passing through its optical centre.
(ii) parallel to its principal axis.

(iii) directed towards its principal focus.

Solution: (i) A ray of light passing through the optical centre of the concave lens will emerge without any deviation.

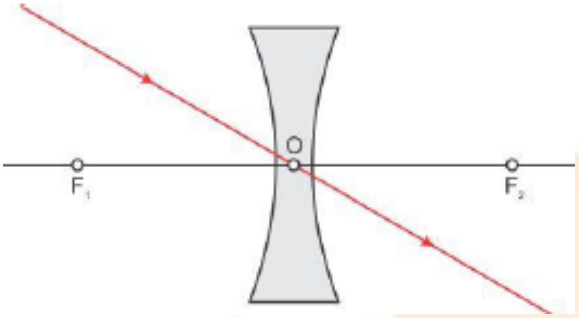

(ii) A ray of light parallel to the principal axis, after refraction from a concave lens, appears to diverge from the principal focus on the same side of the lens.

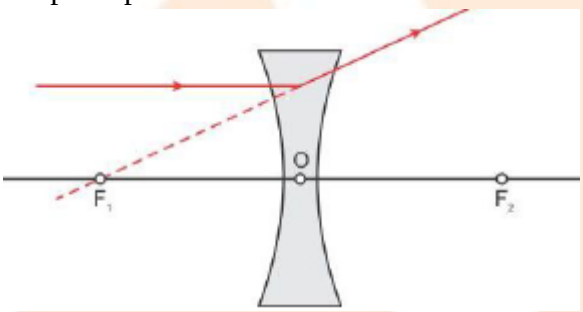

(iii) A ray of light directed towards the principal focus of a concave lens, becomes parallel to its principal axis after refraction through the lens.

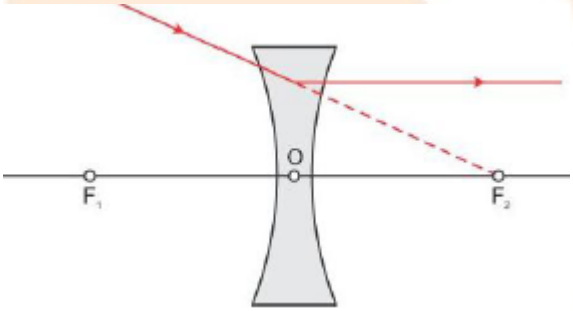

Marks: 3

Question 14. A narrow beam PQ of white light is passing through a glass prism ABC as shown in the diagram.

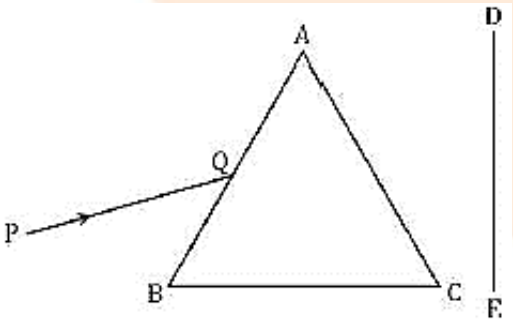

Trace it on your answer sheet and show the path of the emergent beam as observed on the screen DE.

(i) Write the name and cause of the phenomenon observed.

(ii) Where else in nature is this phenomenon observed?

(iii) Based on this observation, state the conclusion which can be drawn about the constituents of white light.

Solution:

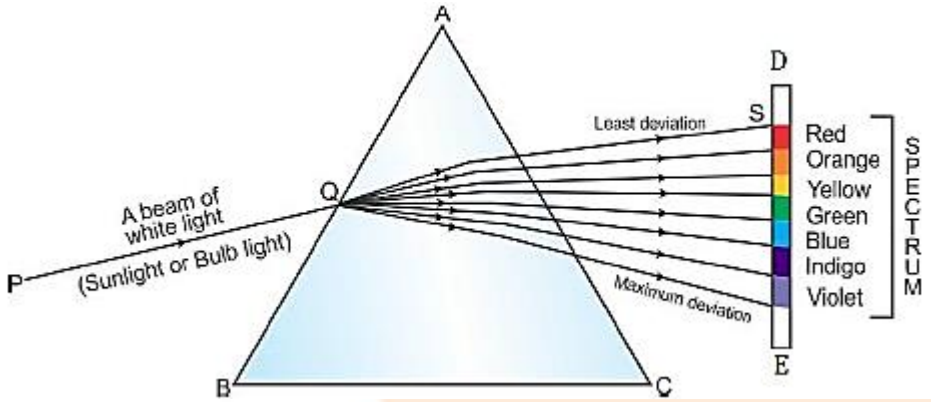

(i) Dispersion of light

Cause: The dispersion of white light occurs because colors of white light travel at different speeds through glass prism. Different colours undergo different deviations on passing through prism.

(ii) Rainbow is the example of dispersion of light observed in nature.

It is caused due to dispersion of sunlight by water droplets in the atmosphere. It always forms in the direction opposite to the sun.

(iii) White light is a mixture of seven colours. The sequence of colours given by the prism is Violet, Indigo, Blue, Green, Yellow, Orange and Red. **VIBGYOR** is the acronym for this sequence. The red light bends the least and violet light bends the most.

Marks: 3

Question 15. "Energy flow in a food chain is unidirectional" Justify this statement. Explain how the pesticides enter a food chain and subsequently get into our body.

Solution: The flow of energy in the ecosystem is said to be unidirectional because the energy lost as heat from the living organisms of a food chain cannot be reused by plants in photosynthesis.

Pesticides are non-biodegradable wastes which pass along the food chain from crops to man or other animals and birds and harm them.

Marks: 3

Question 16. Write one difference between asexual and sexual mode of reproduction. Which species is likely to have better chances of survival - the one reproducing asexually or the one reproducing sexually? Justify your answer.

Solution: The difference between asexual and sexual reproduction is that only one parent is needed in asexual reproduction whereas two parents are needed in sexual reproduction.

The organisms reproducing sexually have better chances of survival because it promotes diversity of characters in an offspring due to combinations of genes which can lead to variation whereas in asexual reproduction evolutionary change is not possible as only one parent is involved therefore no variation takes place.

Marks: 3

Question 17. What is the effect of DNA copying, which is not perfectly accurate, on the reproduction process? How does the amount of DNA remain constant though each new generation is a combination of DNA copies of two individuals?

Solution: The DNA copying which is not perfectly accurate in the reproduction process results in variations in populations for the survival of species.

The amount of DNA remains constant because the gametes are special type of cells called reproductive cells which contain only half the amount of DNA as compared to the normal body cells of an organism.
Marks: 3

Question 18. List three main factors responsible for the speciation and briefly describe each one of them.
Solution: The process by which new species develop from the existing species is known as speciation. The important factors which could lead to speciation are:
i. Geographical isolation of a population caused by various type of barriers such as mountain ranges, rivers and seas.
ii. Genetic drift caused by drastic changes in the frequencies of particular genes by chance alone.
iii. Variations caused in individuals due to natural selection.
Marks: 3

Question 19. "A trait may be inherited, but may not be expressed." Justify this statement with the help of a suitable example.
Solution: Some traits are determined by the combined effect of more than one pair of genes. These are referred to as polygenic or continuous, traits.
An example of this is human stature. The combined size of all of the body parts from head to foot determines the height of an individual. There is an additive effect. The sizes of all of these body parts are, in turn, determined by numerous genes. Human skin, hair, and eye color are also polygenic traits because they are influenced by more than one allele at different loci. The result is the perception of continuous gradation in the expression of these traits.
Marks: 3

Question 20. List two reasons for carbon forming a large number of compounds. Name the type of bonding found in most of its compounds. Why does carbon form compounds mainly by this kind of bonding?
Give reason why the carbon compounds
(i) generally have low melting and boiling points.
(ii) do not conduct electricity in molten state.
Solution: The two characteristic properties of the carbon element which leads to the formation of a very large number of organic compounds are: Catenation and Tetravalency.
Catenation: Carbon has the unique ability to form bonds with other atoms of carbon, giving rise to large molecules. This property is called catenation.
Tetravalency: Carbon has a valency of four. So, it is capable of bonding with four other atoms of carbon or atoms of some other mono-valent element.
1. *Covalent bonding* is found in most of the carbon compounds.
2. Carbon form compounds mainly by covalent bonding because-
The bonds that carbon forms with most other elements are very strong making these compounds exceptionally stable. One reason for the formation of strong bonds by carbon is its small size. This enables the nucleus to hold on to the shared pairs of electrons strongly. The bonds formed by elements having larger atoms are much weaker.
(i) Carbon compounds generally have low melting points and boiling points because-
The force of attraction between the molecules of carbon compounds is not very strong. These weak intermolecular forces make them very easy to pull apart from each other. Since they are easy to separate, carbon compounds have low melting and boiling points.

(ii) Carbon compounds do not conduct electricity in molten state because bonding in carbon compounds does not involve any formation of ions.
Marks: 5

Question 21. (a) List the parts of the human eye that control the amount of light entering into it. Explain how they perform this function.
(b) Write the function of retina in human eye.
(c) Do you know that the corneal-impairment can be cured by replacing the defective cornea with the cornea of the donated eye? How and why should we organise groups to motivate the community members to donate their eyes after death?
Solution: (a) The iris and pupil are the two parts of human eye that controls the amount of light entering the eyes. The iris automatically adjusts the size of the pupil according to the intensity of light received by the eye.
If the amount of light received by the eye is large (as during the daytime), then the iris contracts the pupil (makes the pupil small) and reduces the amount of light entering the eye. On the other hand, if the amount of light received by the eye is small (as in a dark room or during night), the iris expands the pupil (makes the pupil large) so that more light may enter the eyes. Thus, the iris regulates (or controls) the amount of light entering the eye by changing the size of the pupil.
(b) The retina acts as a screen on which the image is formed in the eye. The retina has a large number of light-sensitive cells. When the image falls on the retina then these light-sensitive cells get activated and generate electrical signals.
(c) Yes.
There is a need for awareness among various communities about eye donation after death as it will help a person suffering from an eye ailment to get the treatment.
The following steps can be taken to organize groups to motivate them:
(i) The person who is taking the initiative can communicate with people and after realizing people who are like minded should gather them and form an awareness group.
(ii) The group should then approach various communities and organizations in their area and promote their campaign.
(iii) They can also approach various hospitals and clinics to promote the campaign.
Marks: 5

Question 22. (a) Explain the following terms related to spherical lenses:
(i) optical centre
(ii) centres of curvature
(iii) principal axis
(iv) aperture
(v) principal focus
(vi) focal length
(b) A converging lens has focal length of 12 cm. Calculate at what distance the object should be placed from the lens so that it forms an image at 48 cm on the other side of the lens.
Solution: (a)
(i) *Optical centre*:
The central point of the lens is known as optical centre. It is represented as O. The optical centre of a lens has a property that a ray of light passing through it does not suffer any deviation and goes straight.

(ii) *Centre of Curvature*:
The centre of sphere of part of which a lens is formed is called the centre of curvature of the lens. Since concave and convex lenses are formed by the combination of two parts of spheres, therefore they have two centres of curvature. One centre of curvature is usually denoted by C1 and second is denoted by C2.
(iii) *Principal Axis*:
The principal axis of a lens is a line passing through the optical centre of the lens and perpendicular to both the faces of the lens.
(iv) *Aperture*:
The diameter of sphere of part of which a lens is formed is called the aperture.
(v) *Principal Focus*:
The convex lens converge the rays incident on it after refraction, to a point on the principal axis. This point is known as principal focus of the convex lens.
The rays incident on concave lens appear to diverge from a point on the principal axis. This point is known as the principal focus of concave lens.
(vi) *Focal Length*:
The focal length of a lens is the distance between optical centre and principal focus of the lens.
(b) Given,
Image distance: v = +48 cm (It is on the other side of the lens)
Focal length: f = +12 cm (It is a converging lens or convex lens)
Object distance: u =? (To be calculated)
Now, putting these values in the lens formula:

$$\frac{1}{f}=\frac{1}{v}-\frac{1}{u}$$

$$\Rightarrow \frac{1}{12}=\frac{1}{48}-\frac{1}{u}$$

$$\Rightarrow \frac{1}{u}=\frac{1}{48}-\frac{1}{12}$$

$$\Rightarrow \frac{1}{u}=\frac{1-3}{48}$$

$$\Rightarrow \frac{1}{u}=\frac{-1}{24}$$

$$\Rightarrow u = -24 \text{ cm}$$

Therefore, the object should be placed at a distance of 24 cm from the convex lens. The minus sign with the object distance shows that the object is on its left side.
Marks: 5

Question 23. (a) Draw a sectional view of human female reproductive system and label the part where
(i) eggs develop.
(ii) fertilisation takes place.
(iii) fertilised egg gets implanted.
(b) Describe, in brief, the changes the uterus undergoes
(i) to receive the zygote.
(ii) if zygote is not formed.
Solution: (a) (i) Ovary
(ii) Fallopian tubes

(iii) Uterus

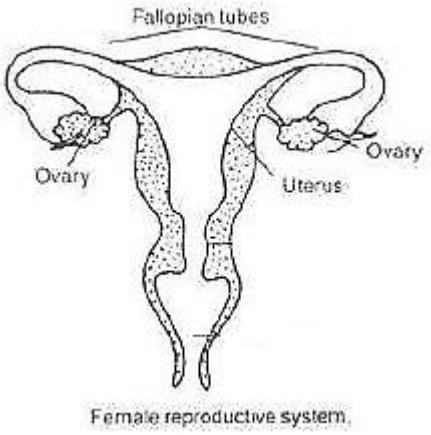

(b) (i) If the uterus receives the zygote, the female becomes pregnant. The embryonic development of the zygote starts immediately. The embryo moves down into the uterus forming a thick and soft lining of blood vessels around itself. This process is called implantation. After implantation, a special tissue develops between the uterine wall and the embryo called placenta, where the exchange of nutrients, oxygen and waste products takes place.

(ii) If the egg released by the ovary is not fertilized and the zygote is not formed, then the thick lining of the uterus breaks down and comes out through the vagina in the form of blood and mucous. This is called menstruation.

Marks: 5

Question 24. (a) Name the parts labelled as A, B, C and D in the diagram given below:

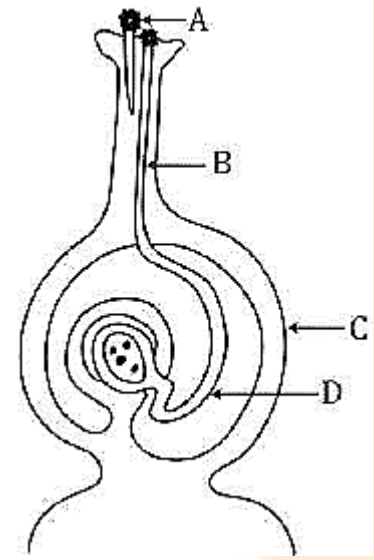

(b) What is pollination? State its significance.

(c) How does fertilisation occur in flowers? Name the parts of the flower that develop into (i) seed, and (ii) fruit after fertilisation.

Solution: (a) A - Pollen grain

B - Pollen tube

C - Ovary

D - Female germ cell

(b) Pollination is the process of transfer of pollen grains from anther to stigma of the flower.

Significance of pollination: Pollination is a significant event because it precedes fertilization. It brings the two types of gametes closer for the process of fertilization.

Also, cross pollination introduces variations in the plants due to mixing of different genes which increases adaptability towards environment or surroundings.
(c) Fertilization in plants: In plants, pollination is followed by fertilization. Once the pollen grains are deposited on the stigma, they form tubes called pollen tubes. The pollen tubes grow through the ovules and reach the ovary where ovules are located. The pollen tube normally enters the ovule through a small opening called micropyle. Inside the ovule, the pollen tube releases two male gametes into the embryo sac.

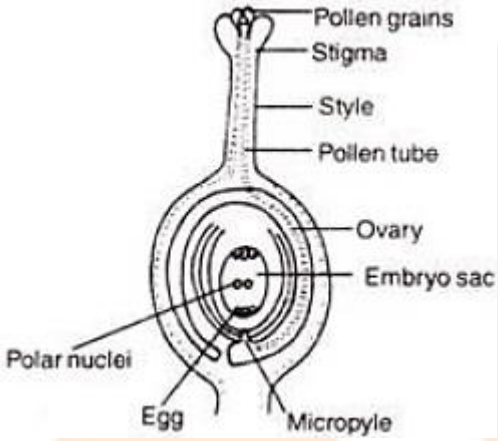

The embryo sac of the ovule contains the egg. One male gamete fuses with the egg. This fusion of male and female gamete is called syngamy and its product is called zygote. The other male gamete fuse with two polar bodies and this process is called triple fusion, where three nuclei are involved in the fusion process, one male gamete and two polar nuclei. Thus, inside each embryo sac, two fusions, syngamy and triple fusion, takes place. This mechanism of two fusions occurring in an embryo sac is called double-fertilization. After fertilization, ovules develop into the seeds and ovary develops into the fruit.
Marks: 5

SECTION B

Question 25. In the following diagram showing the structure of embryo of a dicot seed, what are the parts marked I, II and III sequentially?

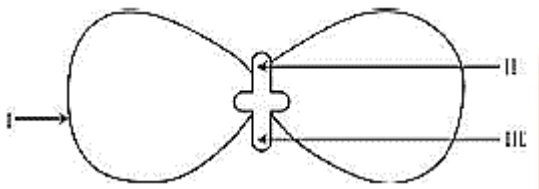

(A) Plumule, Cotyledon, Radicle
(B) Plumule, Radicle, Cotyledon
(C) Cotyledon, Plumule, Radicle
(D) Radicle, Plumule, Cotyledon
Solution: (A)
In the figure, the part marked I is Plumule, II is Cotyledon and III is Radicle.
Marks: 1

Question 26. Study the following statements:
I. Wings of birds and wings of bats are homologous organs.
II. Wings of birds and wings of insects are modified forelimbs.
III. Wings of birds and wings of insects are analogous organs.
IV. Wings of birds and forelimbs of horse are homologous organs.

The correct statements are
(A) I and II
(B) II and Ill
(C) III and IV
(D) I and IV
Solution: (C)
III and IV are the correct statements.
Marks: 1

Question 27. Which of the following pairs of two vegetables represent the correct homologous structures?
(A) Sweet potato and potato
(B) Sweet potato and tomato
(C) Carrot and potato
(D) Radish and carrot
Solution: (D)
Radish and carrot are the modifications of roots. Hence, they are the homologous structures.
Marks: 1

Question 28. When you study a slide showing different stages of budding in yeast, you observe the following stages:
I. The bud may get separated from the parent body and develop into a new individual.
II. The body of the bud develops and gives rise to another baby bud.
III. A bud comes out in any direction from the body of the parent cell.
IV. Thus they may form a colony.
The proper sequence of the above stages is
(A) II, I, III, IV
(B) II, III, I, IV
(C) III, II, l, IV
(D) III, I, II, IV
Solution: (C)
This is the correct sequence of budding in yeast.
Marks: 1

Question 29. A student has to focus his compound microscope to observe a prepared slide showing different stages of binary fission in Amoeba. The steps he is likely to follow are listed below in a haphazard manner:
I. Adjust the diaphragm and the mirror of the microscope so that sufficient light may enter to illuminate the slide.
II. Fix the slide on the stage carefully.
III. Adjust the microscope to high power and focus.
IV. Adjust the microscope to low power and focus.
The correct sequence of the above steps to observe the slide under the microscope is
(A) I, II, IV, III
(B) II, I, IV, III
(C) II, IV, I, III
(D) I, IV, II, III

Solution: (B)
This is the correct sequence.
Marks: 1

Question 30. A student takes about 2 mL ethanoic acid in a dry test tube and adds a pinch of sodium hydrogen carbonate to it. He reports the following observations:
I. Immediately a colourless and odourless gas evolves with a brisk effervescence.
II. The gas turns lime water milky when passed through it.
III. The gas burns with an explosion when a burning splinter is brought near it.
IV. The gas extinguishes the burning splinter that is brought near it.
The correct observations are
(A) I, II and III
(B) II, III and IV
(C) III, IV and I
(D) I, II and IV
Solution: (D)
Statements I, II and IV are true. The carbon dioxide gas gets liberated. It is colourless, odourless and turns lime water milky. The gas extinguishes the burning splinter when brought near it. This is because; carbon dioxide does not burn or support combustion.
Marks: 1

Question 31. In an experiment to study the properties of ethanoic acid, a student takes about 3 mL of ethanoic acid in a dry test tube. He adds an equal amount of distilled water to it and shakes the test tube well. After some time he is likely to observe that
(A) a colloid is formed in the test tube.
(B) the ethanoic acid dissolves readily in water.
(C) the solution becomes light orange.
(D) water floats over the surface of ethanoic acid.
Solution: (B)
Ethanoic acid is readily soluble in water.
Marks: 1

Question 32. We need 20% aqueous solution of sodium hydroxide for the study of saponification reaction. When we open the lid of the bottle containing solid sodium hydroxide we observe it in which form?
(A) Colourless transparent beads
(B) Small white beads
(C) White pellets/flakes
(D) Fine white powder
Solution: (C)
Sodium hydroxide is present in the form of white flakes or pellets.
Marks: 1

Question 33. While studying saponification reaction, a student measures the temperature of the reaction mixture and also finds its nature using blue/red litmus paper. On the basis of his observations the correct conclusion would be

(A) the reaction is exothermic and the reaction mixture is acidic.
(B) the reaction is endothermic and the reaction mixture is acidic.
(C) the reaction is endothermic and the reaction mixture is basic.
(D) the reaction is exothermic and the reaction mixture is basic.
Solution: (C)
The reaction is endothermic and the reaction mixture is basic in nature.
Saponification is defined as the hydrolysis of an ester under basic conditions leading to the formation of sodium salt of fatty acids. It is an endothermic reaction meaning it absorbs surrounding heat.
Marks: 1

Question 34. In a locality, hard water, required for an experiment, is not available. However, the following salts are available in the school laboratory:
1. Sodium sulphate
2. Calcium sulphate
3. Magnesium chloride
4. Sodium chloride
5. Calcium chloride
6. Potassium sulphate

Which of the above salts may be dissolved in water to obtain hard water for the experiment?
(A) 2, 3 and 5
(B) 1, 2 and 5
(C) 1, 2, 4 and 6
(D) 3 and 5 only
Solution: (A)
Hard water is an impure form of water having high mineral contents like, Calcium, Magnesium, sulphides, chlorides, bicarbonates etc.
Marks: 1

Question 35. A student focused the Sun rays using an optical device 'X' on a screen S as shown.

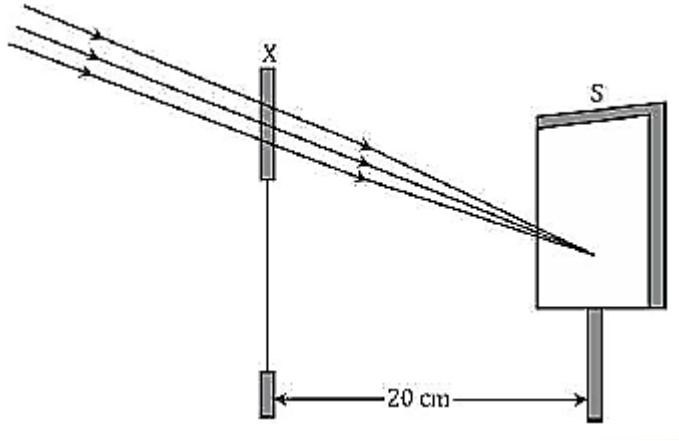

From this it may be concluded that the device 'X' is a (select the correct option)
(A) Convex lens off focal length 10 cm.
(B) Convex lens of radius of curvature 20 cm.
(C) Convex lens of focal length 20 cm.
(D) Concave mirror of focal length 20 cm.
Solution: (C)

Optical device ‘X’ is a convex lens as sun rays are focused on the screen.
Marks: 1

Question 36. A student has obtained an image of a well-illuminated distant object on a screen to determine the focal length, F1of the given spherical mirror. The teacher then gave him another mirror of focal length, F2 and asked him to obtain a focused image of the same object on the same screen. The student found that in order to focus the same object using the second mirror, he has to move the mirror away from the screen. From this observation, it may be concluded that both the spherical mirrors given to the student were (select the correct option)
(A) Concave and $F_1 < F_2$
(B) Concave and $F_1 > F_2$
(C) Convex and $F_1 < F_2$
(D) Convex and $F_1 > F_2$
Solution: (A)
Since the image is focused, the spherical mirror is a concave mirror.
For second mirror the distance is increased to focus the image on the screen. Hence, focal length is more than that of first mirror.
Marks: 1

Question 37. In the following diagram, the path of a ray of light passing through a glass prism is shown:

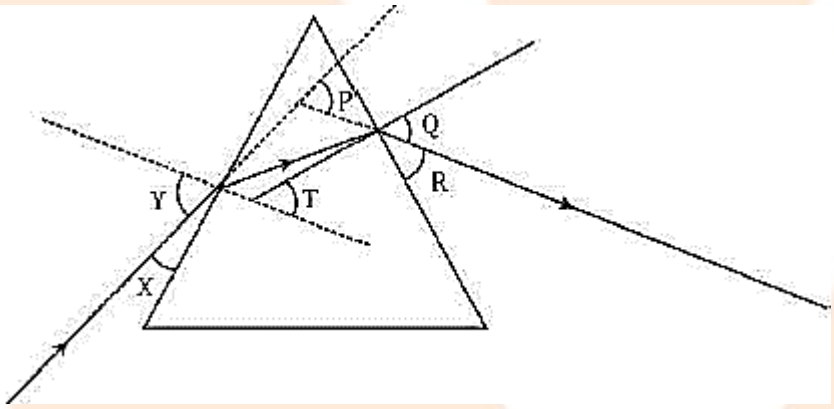

In this diagram the angle of incidence, the angle of emergence and the angle of deviation respectively are (select the correct option):
(A) X, R and T
(B) Y, Q and T
(C) X, Q and P
(D) Y, Q and P
Solution: (D)
Marks: 1

Question 38. Study the following diagrams in which the path of a ray of light passing through a glass prism as traced by four students P, Q, R and S is shown:

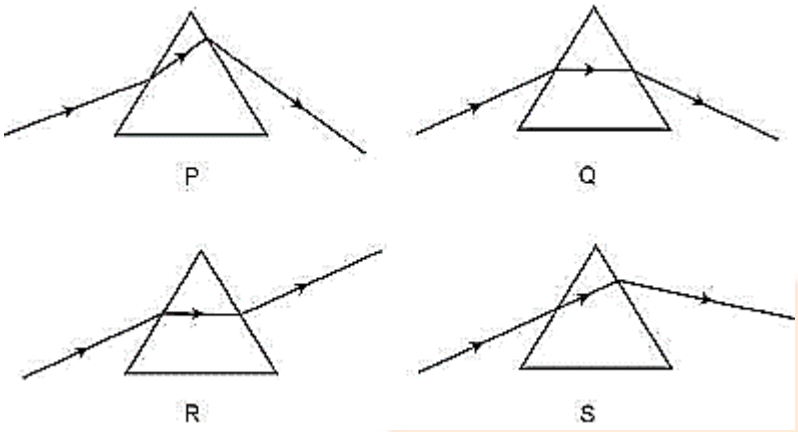

The student who has traced the path correctly is

(A) P

(B) Q

(C) R

(D) S

Solution: (B)

Marks: 1

Question 39. A student is using a convex lens of focal length 18 cm to study the image formation by it for the various positions of the object. He observes that when he places the object at 27 cm, the location of the image is at 54 cm on the other side of the lens. Identify from the following diagram the three rays that are obeying the laws of refraction and may be used to draw the corresponding ray diagram.

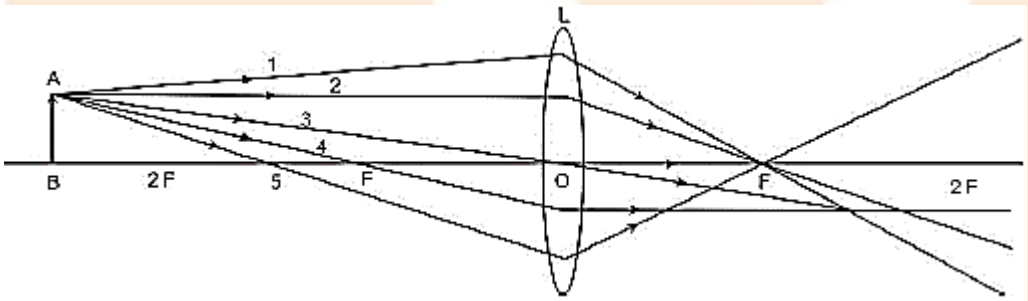

(A) 1, 2 and 4

(B) 1, 3 and 5

(C) 2, 4 and 5

(D) 2, 3 and 4

Solution: (D)

Ray 2, 3 and 4 are obeying the laws of refraction.

Ray 2 is parallel to the principal axis and passes through the principal focus after refraction.

Ray 3 passes from the optical centre of the lens and emerges without any deviation.

Ray 4 is passing through the principal focus and after refraction from a convex lens emerges parallel to the principal axis.

Ray 1 and 5 cannot pass through the focus after refraction as they are not parallel to the principal axis.

Marks: 1

Question 40. A student is using a convex lens of focal length 10 cm to study the image formation by a convex lens for the various positions of the object. In one of his observations, he may observe that when the object is placed at a distance of 20 cm from the lens, its image is formed at (select the correct option)

(A) 20 cm on the other side of the lens and is of the same size, real and erect.
(B) 40 cm on the other side of the lens and is magnified, real and inverted.
(C) 20 cm on the other side of the lens and is of the same size, real and inverted.
(D) 20 cm on the other side of the lens and is of the same size, virtual and erect.
Solution: (C)
Focal length f = 10 cm
The object is placed at 2F (2 × 10 = 20 cm). Hence the image is also formed at 2F.

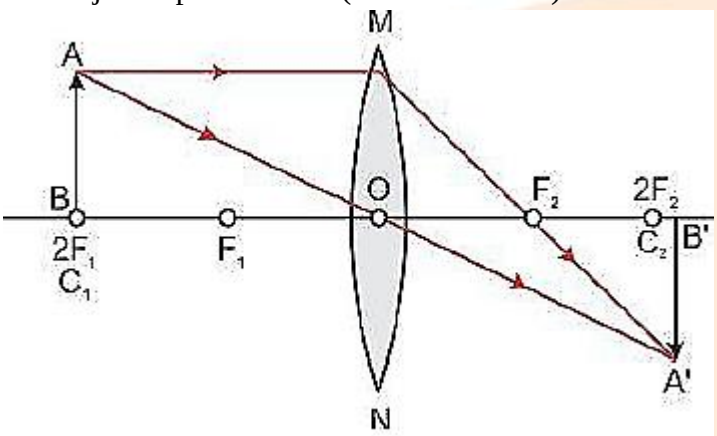

Position of object	Position of image	Size of image	Nature of image
At $2F_1$	At $2F_2$	Same size	Real and inverted

Marks: 1

Question 41. A student traces the path of a ray of light passing through a rectangular glass slab and marks the angle of incidence i, angle of refraction r and angle of emergence e, as shown.

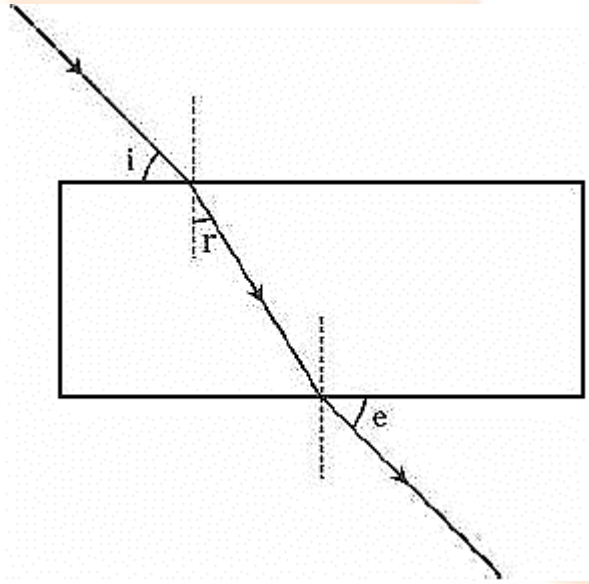

The correctly marked angle(s) is/are
(A) ∠i only
(B) ∠e only
(C) ∠r only
(D) ∠i and ∠e
Solution: (C)

Other angles are not taken with respect to normal.
Marks: 1

Question 42. After tracing the path of a ray of light passing through a rectangular glass slab for four different values of the angle of incidence, a student reported his observations in tabular form as given below:

S. No	$\angle i$	$\angle r$	$\angle e$
I	30^0	19^0	29^0
II	40^0	28^0	40^0
III	50^0	36^0	50^0
IV	60^0	40^0	59^0

The best observation is
(A) I
(B) II
(C) III
(D) IV
Solution: (A)
For glass slab, $\angle i = \angle e$
Refractive index of glass = 1.5
$$\frac{\sin 30^\circ}{\sin 19^\circ} \approx 1.5$$
$$\angle 30^\circ \approx \angle 29^\circ$$
Marks: 1